REPUBLIC OF SOUTH AFRICA

REPUBLIEK VAN SUID AFRIKA

PATENTS ACT, 1978

CERTIFICATE

In accordance with section 44 (1) of the Patents Act, No. 57 of 1978, it is hereby certified that:

SHANDONG LABOR VOCATIONAL AND TECHNICAL COLLEGE (SHANDONG LABOR TECHNICIAN COLLEGE)

Has been granted a patent in respect of an invention described and claimed in complete specification deposited at the Patent Office under the number

2022/02215

A copy of the complete specification is annexed, together with the relevant Form P2.

In testimony thereof, the seal of the Patent Office has been affixed at Pretoria with effect from the **29th** day of **June 2022**

.....

Registrar of Patents

FORM P2

REPUBLIC OF SOUTH AFRICA
PATENTS ACT, 1978
REGISTER OF PATENTS

Official application No.			Lodging date: Provisional		Acceptance date	
21	01	2022/02215	22		47	25 May 2022
International classification			Lodging date: National phase		Granted date	
51	F16M		23	22 February 2022		29 June 2022
71	Full name(s) of applicant(s)/Patentee(s):					
Shandong Labor Vocational and Technical College (Shandong Labor Technician College)						
71	Applicant(s) substituted:				Date registrered	
71	Assignee(s):				Date registrered	
72	Full name(s) of inventor(s):					
(1) YANG, Shuodong; (2) LIU, Yang; (3) LIANG, Jie						
Priority claimed:		Country		Number		Date
54	Title of invention					
MULTIFUNCTIONAL COMPUTER DISPLAY PROTECTION DEVICE						
Address of applicant(s)/patentee(s):						
No. 23266, Jingshi Road, Jinan City, Shandong Province, 250022, China						
74	Address for service					
Sibanda and Zantwijk, Oaktree Corner, 9 Kruger Street, Oaklands (PO Box 1615 Houghton 2041), Johannesburg, 2192, SOUTH AFRICA Reference no.: PT_CP_ZA00003340 ([InsID:])						
61	Patent of addition No.			Date of any change		
Fresh application based on.				Date of any change		

FORM P7

REPUBLIC OF SOUTH AFRICA
PATENTS ACT, 1978
COMPLETE SPECIFICATION
[Section 30(1) – Regulation 28]

OFFICIAL APPLICATION NO.		
21	01	2022/02215

LODGING DATE	
22	22 February 2022

INTERNATIONAL CLASSIFICATION	
51	F16M

FULL NAME(S) OF APPLICANT(S)	
71	Shandong Labor Vocational and Technical College (Shandong Labor Technician College)

FULL NAME(S) OF INVENTORS(S)	
72	YANG, Shuodong LIU, Yang LIANG, Jie

TITLE OF INVENTION	
54	MULTIFUNCTIONAL COMPUTER DISPLAY PROTECTION DEVICE

MULTIFUNCTIONAL COMPUTER DISPLAY PROTECTION DEVICE

TECHNICAL FIELD

[01] The invention relates to the technical field of computer instruments, in particular to a multifunctional computer display protection device.

BACKGROUND ART

[02] A computer is generally called as a artificial brain and is a modern machine for utilizing an electronic technique and related principles to process data according to a series of instructions. A computer display is generally called as a computer monitor or a computer screen. The computer display is a most important computer part except a CPU, a main board, internal storage, a power source, a keyboard and a mouse, and is a display tool for displaying certain electronic file information to a screen and then reflecting the electronic file information to the human eyes through specific transmission equipment. As development of science and technology, most of people select a light and thin liquid crystal display, but accumulated dust and other phenomena happen when the display is not used for a long term, and consequently, the effects of the display are influenced.

[03] The Chinese patent (notification number:CN208566063U) discloses a multifunctional computer display protection device comprising a display body. A base is fixedly connected to the lower surface of the display body. A supporting plate is in lap joint to the upper surface of the display body. A fixing block is fixedly connected to the left side of the lower surface of the supporting plate, a fixing groove is formed in the fixing block, and limiting grooves are formed in the top and the bottom of the inner wall of the fixing groove. An annular groove is formed in the inner walls of the right sides of the limiting grooves. Although the device moves a rotating rod, the rotating rod controls a connecting rod to enable a baffle to tightly press the display body, so that a protection shell is suitable for display bodies different in width, fixing of a first protection plate and a second protection plate is facilitated, and the function of improving usability of the protection shell is improved; but, during actual usage, a large part of the display is exposed in air and can be stained with dust, later usage is seriously influenced, and therefore further improvement is needed.

SUMMARY

[04] The present invention aims at providing a multifunctional computer display protection device so as to solve the problems provided in the background art.

[05] In order to achieve the above purpose, the present invention provides a following technical solution:

[06] a multifunctional computer display protection device comprises a base, supporting frames are arranged on the two sides of the upper end of the base, and the top end of the supporting frame on the left side is connected with a sealing plate through a hinge; and a fixing barrel is arranged on the right side of the upper end of the base, limiting grooves are formed in the inner wall of the fixing barrel, a telescopic barrel is arranged in the limiting grooves, the outer side of the telescopic barrel is provided with limiting strips matched with the limiting grooves, an inner threaded hole is formed in the telescopic barrel, a lead screw is arranged in the inner threaded hole, a wedge-shaped block is arranged at the upper end of the telescopic

barrel, the upper end of the wedge-shaped block makes contact with a lower lifting ball, a lifting column is connected to the upper end of the lower lifting ball, penetrates through a guide frame arranged between the middles of the supporting frames and is connected with an upper lifting ball, fixing plates are arranged at the left end of the supporting frame on the right side, a rotating shaft is arranged between the fixing plates, and a rotating plate is arranged in the middle of the rotating shaft.

[07] As a further solution of the present invention, suction cups are arranged at the lower end of the base.

[08] As a further solution of the present invention, the right end of the lead screw penetrates through the supporting frame on the right side to be connected with a rotating handle.

[09] As a further solution of the present invention, a stop block is arranged at the top end of the right side of the supporting frame on the left side.

[10] As a further solution of the present invention, a rotating groove is formed in the middle of the lower end of the rotating plate, and the upper lifting ball is arranged in the rotating groove.

[11] As a further solution of the present invention, a display body is arranged at the upper end of the rotating plate.

[12] As a further solution of the present invention, the limiting strips are arranged at the front end and the rear end of the telescopic barrel.

[13] As a further solution of the present invention, the left end of the wedge-shaped block is low, and the right end of the wedge-shaped block is high.

[14] Compared with the prior art, the present invention has the beneficial effects:

[15] the multifunctional computer display protection device is reasonable in structure and novel in design; through cooperation of the arranged telescopic barrel and the arranged fixing barrel, left-right movement of the wedge-shaped block is achieved, then through the action of the lifting column, the angle of the rotating plate is adjusted, and the needs of people for usage of a computer display are met; and meanwhile, when not used, the computer display can be hidden below the sealing plate, omnibearing protection on the display is achieved, and practicability and reliability are high.

BRIEF DESCRIPTION OF THE DRAWINGS

[16] FIG.1 is a structural schematic diagram of a multifunctional computer display protection device.

[17] FIG.2 is a section view structural schematic diagram of A-A in FIG.1.

[18] FIG.3 is a structural schematic diagram of a fixing barrel in a multifunctional computer display protection device.

[19] FIG.4 is a structural schematic diagram of a telescopic barrel in a multifunctional computer display protection device.

[20] In drawings: 1-base; 2-suction cup; 3-supporting frame; 4-telescopic barrel; 5-lead screw; 6-fixing barrel; 7-rotating handle; 8-guide frame; 9-wedge-shaped block; 10-lifting column; 11-lower lifting ball; 12-upper lifting ball; 13-rotating groove; 14-rotating plate; 15-stop block; 16-hinge; 17-sealing plate; 18-display body; 19-fixing plate; 20-rotating shaft; 21-limiting strip; 22-limiting groove; and 23-inner threaded hole.

DETAILED DESCRIPTION OF THE EMBODIMENTS

[21] It needs to be explained that under the non-conflict situation, embodiments in the present invention and features of the embodiments can be mutually combined.

[22] In the description of the present invention, it is to be understood that orientation or position relationships indicated by terms "center", "longitudinal", "transverse", "upper", "lower", "front", "rear", "left", "right", "vertical", "horizontal", "top", "bottom", "inner", "outer", and the like are orientation or position relationships shown based on the drawings, are adopted not to indicate or imply that indicated devices or components must be in specific orientations or structured and operated in specific orientations but only to conveniently describe the present invention and simplify the description, and thus should not be understood as limits to the present invention. In addition, terms "first", "second" and the like are only used for describing the purpose not understood as indicating or implying relative importance or implying to indicate the number of indicated technical features. Thus, features limited with "first", "second" and the like can indicate or invisibly comprise one or more features. In the description of the present invention, "a plurality of" means two or more except as otherwise noted.

[23] In the description of the present invention, it needs to be described that except additional specific regulations and limitation, terms "installation", "connection", and "link"need to be generally understood, for example, it can be fixed connection, and can also be detached connection or integrated connection; it can be mechanical connection and electric connection; and it can be direct connection, can be indirect connection through an intermediate medium and can be communication of interiors of two elements. Ordinary skill in the art can understand specific meaning of the above terms in the present invention according to the specific situation.

[24] The present invention is described in detail in reference to drawings and in combination with the embodiments as below.

Embodiment 1

[25] Please refer to FIG.1 ~ FIG. 4, in the embodiment of the present invention, a multifunctional computer display protection device comprises a base 1, suction cups 2 are arranged at the lower end of the base 1 and used for achieving supporting and fixing of the whole device on a tabletop, supporting frames 3 are arranged on the two sides of the upper end of the base 1, the top end of the supporting frame 3 on the left side is connected with a sealing plate 17 through a hinge 16, and then the sealing plate 17 can make the supporting frame 3 rotate under the action of the hinge 16; a fixing barrel 6 is arranged on the right side of the upper end of the base 1, limiting grooves 22 are formed in the inner wall of the fixing barrel 6, a telescopic barrel 4 is arranged in the limiting grooves 22, the outer side of the telescopic barrel 4 is provided with limiting strips 21 matched with the limiting grooves 22, accordingly, the left-right moving positions of the telescopic barrel 4 are guided and limited, front-back position swinging is avoided, and the limiting strips 21 are arranged at the front end and the rear end of the telescopic barrel 4; an inner threaded hole 23 is formed in the telescopic barrel 4 and

internally provided with a lead screw 5 so that the rotating movement of the lead screw 5 can be converted into the left-right position movement of the telescopic barrel 4; the right end of the lead screw 5 penetrates through the supporting frame 3 on the right side to be connected with a rotating handle 7 to drive the lead screw 5 to rotate; a wedge-shaped block 9 is arranged at the upper end of the telescopic barrel 4, the left end of the wedge-shaped block 9 is low, the right end of the wedge-shaped block 9 is high, and accordingly when the wedge-shaped block 9 moves leftwards, the rotating plate 14 can rotate clockwise, the upper end of the wedge-shaped block 9 makes contact with a lower lifting ball 11, the upper end of the lower lifting ball 11 is connected with a lifting column 10, the lifting column 10 penetrates through a guide frame 8 arranged between the middles of the supporting frames 3 to be connected with an upper lifting ball 12, the guide frame 8 is used for limiting and guiding the up-down movement of the lifting column 10, and swinging is avoided; and the left end of the supporting frame 3 on the right side is provided with fixing plates 19, a rotating shaft 20 is arranged between the fixing plates 19, a rotating plate 14 is arranged in the middle of the rotating shaft 20, a display body 18 is arranged at the upper end of the rotating plate 14, a rotating groove 13 is formed in the middle of the lower end of the rotating plate 14, the upper lifting ball 12 is arranged in the rotating groove 13, and accordingly the movement guide function is further ensured.

Embodiment 2

[26] In the other embodiment of the present invention, the embodiment is different from the above embodiment in that a stop block 15 is arranged at the top end of the right side of the supporting frame 3 on the left side and used for limiting the lowest end position of the rotating plate 14, and it is guaranteed that the display body is horizontal in position when not used.

[27] When the present invention is used, the rotating handle is controlled, meanwhile, the sealing cover 17 is opened, the rotating handle 7 drives the telescopic barrel 4 to move leftwards, then, the wedge-shaped block 9 is made to synchronously act, then, the wedge-shaped block 9 acts to make the lifting column 10 move upwards, so that the display body 18 rotates clockwise, and usage needs of people are met; and when the present invention is not used, the rotating handle 7 is reversely rotated, so that the display body 18 is horizontally placed on the stop block 15, then, the sealing cover 17 is closed, and the whole operation is convenient and fast. The present invention is reasonable in structure and novel in design; through cooperation of the arranged telescopic barrel 4 and the arranged fixing barrel 6, left-right movement of the wedge-shaped block 9 is achieved, then through the action of the lifting column 10, the angle of the rotating plate 14 is adjusted, and the needs of people for usage of a computer display are met; and meanwhile, when not used, the computer display can be hidden below the sealing plate 17, omnibearing protection on the display is achieved, and practicability and reliability are high.

[28] The above descriptions are merely the better embodiments of the present invention, which are not intended to limit the present invention. Any modification, equivalent replacement, improvement, etc. made within the spirit and principle of the present invention shall fall within the scope of protection of the present invention.

WHAT IS CLAIMED IS:

1. A multifunctional computer display protection device, comprising a base (1), wherein supporting frames (3) are arranged on the two sides of the upper end of the base (1), and the top end of the supporting frame (3) on the left side is connected with a sealing plate (17) through a hinge (16); and characterized in that a fixing barrel (6)is arranged on the right side of the upper end of the base (1),limiting grooves (22) are formed in the inner wall of the fixing barrel (6), a telescopic barrel (4) is arranged in the limiting grooves (22), the outer side of the telescopic barrel (4) is provided with limiting strips (21) matched with the limiting grooves (22), an inner threaded hole (23) is formed in the telescopic barrel (4), a lead screw (5) is arranged in the inner threaded hole (23), a wedge-shaped block (9) is arranged at the upper end of the telescopic barrel (4), the upper end of the wedge-shaped block (9) makes contact with a lower lifting ball (11), a lifting column (10) is connected to the upper end of the lower lifting ball (11), penetrates through a guide frame (8) arranged between the middles of the supporting frames (3) and is connected with an upper lifting ball (12), fixing plates (19) are arranged at the left end of the supporting frame (3) on the right side, a rotating shaft (20) is arranged between the fixing plates (19), and a rotating plate (14) is arranged in the middle of the rotating shaft (20).

2. The multifunctional computer display protection device according to claim 1, characterized in that suction cups (2) are arranged at the lower end of the base (1).

3. The multifunctional computer display protection device according to claim 1, characterized in that the right end of the lead screw (5) penetrates through the supporting frame (3) on the right side to be connected with a rotating handle (7).

4. The multifunctional computer display protection device according to claim 3, characterized in that a stop block (15) is arranged at the top end of the right side of the supporting frame (3) on the left side.

5. The multifunctional computer display protection device according to claim 1, characterized in that a rotating groove (13) is formed in the middle of the lower end of the rotating plate (14), and the upper lifting ball (12) is arranged in the rotating groove (13).

6. The multifunctional computer display protection device according to claim 1 or 5, characterized in that a display body (18) is arranged at the upper end of the rotating plate (14).

7. The multifunctional computer display protection device according to claim 1, characterized in that the limiting strips (21) are arranged at the front end and the rear end of the telescopic barrel (4).

8. The multifunctional computer display protection device according to claim 1, characterized in that the left end of the wedge-shaped block (9) is low, and the right end of the wedge-shaped block (9) is high.

DA van Zantwijk
Sibanda & Zantwijk Patent Attorneys

Drawings

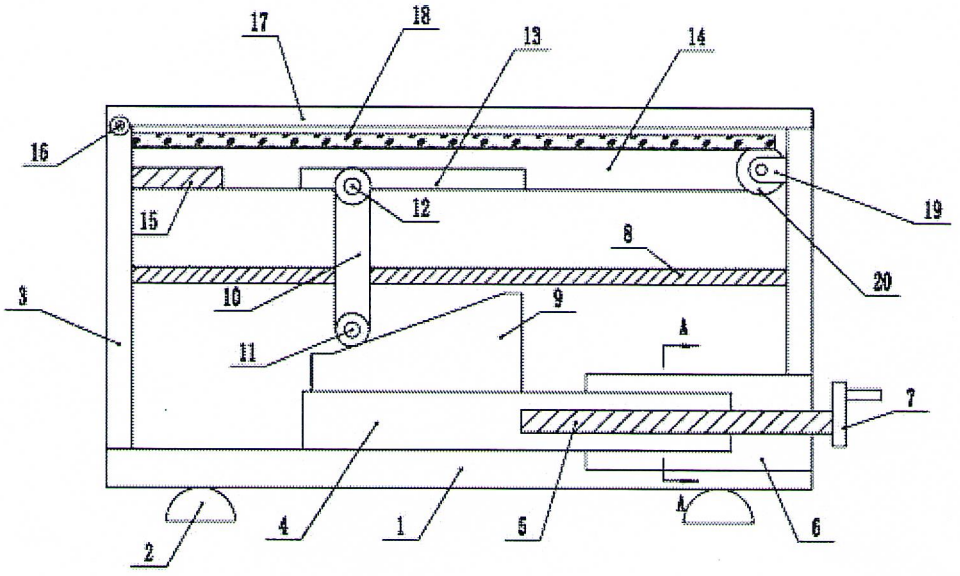

FIG.1

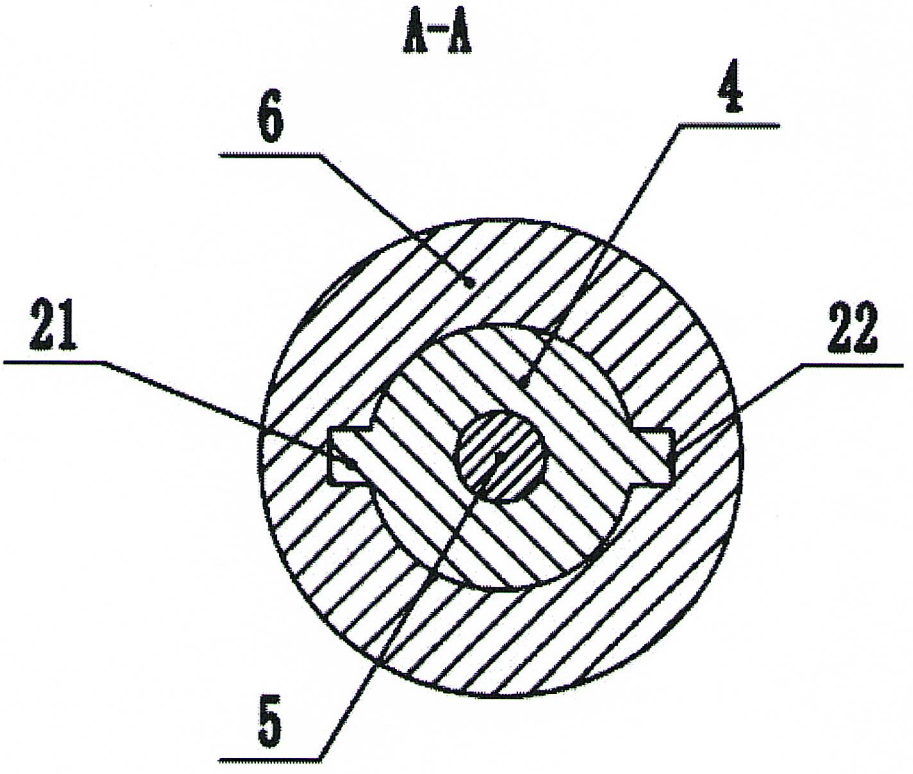

FIG.2

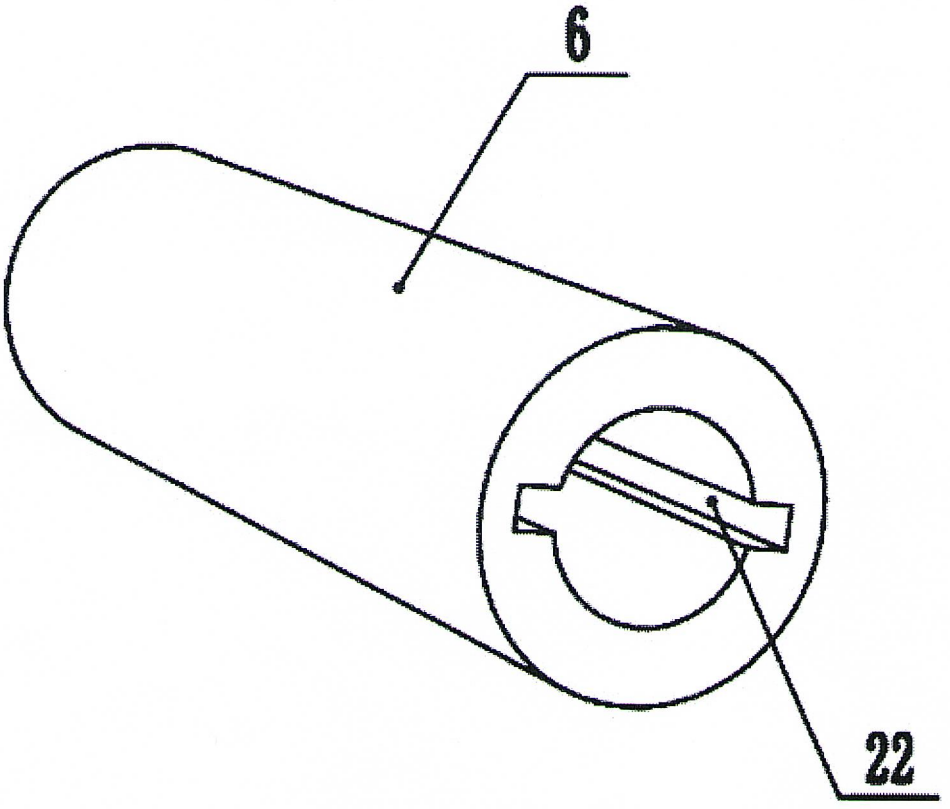

FIG.3

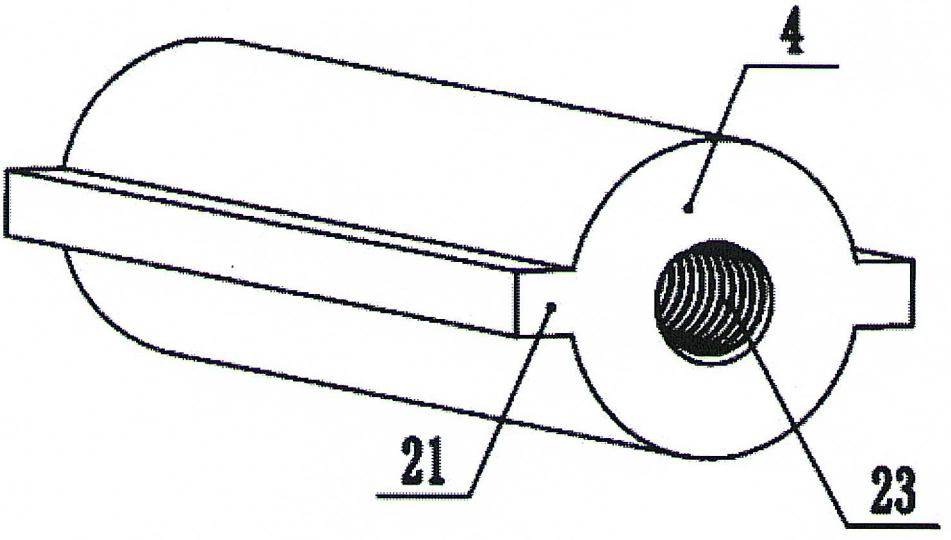

FIG.4

ABSTRACT OF THE DISCLOSURE

The invention discloses a multifunctional computer display protection device. The multifunctional computer display protection device comprises a base, supporting frames are arranged on the two sides of the upper end of the base, the top end of the supporting frame on the left side is connected with a sealing plate through a hinge, a fixing barrel is arranged on the right side of the upper end of the base, limiting grooves are formed in the inner wall of the fixing barrel, and a telescopic barrel is arranged in the limiting grooves; and the outer side of the telescopic barrel is provided with limiting strips matched with the limiting grooves, an inner threaded hole is formed in the telescopic barrel, a lead screw is arranged in the inner threaded hole, a wedge-shaped block is arranged at the upper end of the telescopic barrel.

ABSTRACT DRAWING